Solution for Lubricating Equipment

LubeWORKS®

5:1 Air-operated Oil Pump Instruction Manual

WARNING:

Read carefully and understand all INSTRUCTIONS before operating. Failure to follow the safety rules and other basic safety precautions may result in serious personal injury.
Save these instructions in a safe place and on hand so that they can be read when required.
Keep these instructions to assist in future servicing.

REV 02/01/23

Solution for Lubricating Equipment

LubeWORKS®

GENERAL SAFETY REGULATIONS

WARNING: The warnings, cautions, and instructions discussed in this instruction manual cannot cover all possible conditions or situations that could occur. It must be understood by the operator that common sense and caution are factors that cannot be built into this product, but must be supplied by the operator.

1. Keep the work area clean and dry. Damp or wet work areas can result in injury.
2. Keep children away from work area. Do not allow children to handle this product.
3. Use the right tool for the job. Do not attempt to force small equipment to do the work of larger industrial equipment. There are certain applications for which this equipment was designed. It will do the job better and more safely at the capacity for which it was intended. Do not modify this equipment, and do not use this equipment for a purpose for which it was not intended.
4. Check for damaged parts. Before using this product, carefully check that it will operate properly and perform its intended function. Check for damaged parts and any other conditions that may affect the operation of this product. Replace damaged or worn parts immediately.
5. Do not overreach. Keep proper footing and balance at all times to prevent tripping, falling, back injury, etc.
6. DO NOT use the equipment when tired or under the influence of drugs, alcohol, or medication. A moment of inattention while operating this equipment may result in serious personal injury.

WARNING SYMBOL: This manual contains important warnings and information.Read and keep for reference.

CAUTION SYMBOL: This symbol alerts you to the possibility of serious injury or death if you do not follow the instructions.

CAUTION: This symbol alerts you to the possibility of damage to or destruction of equipment if you do not follow the instructions.

TECHNICAL DETAILS

Item No.	LP103.01/ LP103.07	LP103.02/ LP103.08	LP103.03/ LP103.09	LP103.04	LP103.05	LP103.06
Ref No.	17040510	17040530	17040550	17040510	17040530	17040550
Drum Application	Wall Mounted	50-60L	180-220L	Wall Mounted	13-16gallon	48-58gallon
Pressure Ration	5:1			5:1		
Air Inlet Pressure	2~10bar			30~150psi		
Max.fluid Pressure	50bar			750psi		
Air Motor Effective Dia.	63mm			2-1/2"		
Air Consumption	78L @10bar			2.8CFM @150psi		
Max. Free Flow Rate	15L			4gallon		
Suction Tube Diameter	42mm			1-5/8"		
Suction Tube Length	270mm	730mm	940mm	10-5/8"	28-3/4"	37"
Suction Tube Material	Carbon Steel			Carbon Steel		
Air Inlet Connection	Quick Plug (LP103.01/02/03) 1/4" BSP female (LP103.07/08/09)			1/4" NPT female		
Oil Outlet Connection	1/2" BSP male			1/2" NPT male		

SAFETY INSTRUCTIONS

When the pump is connected to the compressed air supply:

1. The compressed air must be filtered to avoid dust and moisture into pump.
2. The max compressed air pressure must not exceed 1.0Mpa/150psi.
3. To deliver oil, press the knob on the delivery pistol; delivery stops when the knob is released but the whole system remains under pressure.
4. Position the pistol so that the circuit can't open accidentally. Otherwise oil could leak onto the ground.
5. Never point the pistol at people or object.
6. Press the pistol knob.
7. Always cut off the air supply after use so that oil can't leak out in case one of the pump's components should break.
8. Use only original spare parts in case the pump has to be repaired or its components have to be replaced.
9. Empty all the oil from the pump in case it has to be disposed of.
10. When not in use, turn off compressed air to stop pump.
11. Do not use the pump near open flames. Do not smoke during this operation.
12. Wear oil-proof gloves.
13. Do not throw the oil away. Used oil has to be disposed of according to national environmental regulations.
14. The pumps can be used only to deliver lubricants, used oil or antifreeze liquids. Do not use the pump for any other substance.

THE MANUAL OF OIL PUMP

Read the following precautions and instructions before you begin assembly or using.
Failure to comply with these instructions could result in personal injury or property damage.
Keep these instructions in a convenient location for future reference.

IMPORTANT NOTE

The guarantee will be void if the pump has been altered in any way.

PROFILE

Oil pumps can be used to transfer lubrication oil, waste oil and antifreeze liquids.
This manual is applicable to the following pump only, please confirm your pump is included.

TROUBLE SHOOTING

Problem	Possible Causes	Solutions
The Pump can't work	1. Insufficient air 2. Air obstruction	1. Increase air pressure 2. Clear air passage 3. Change voltage
	1. The intake valve is closed 2. The intake valve is blocked	1. Open the intake valve 2. Clean the intake valve
	A blockage in a hose, valve, or other device	Pressure release, cleaning device
	Damage to Screw (5) or plate (8)	Assess damage, repair or replace Screw (5) or plate (8)
	Insufficient oil supply	Replace oil drums to ensure adequate oil supply
Leak of pneumatic device	Damage to Piston (7) or gasket (9) or spring (10)	Assess damage, repair or replace Piston (7) or gasket(9) or spring (10)
The pump is unstable	Insufficient oil supply	Replace oil drums to ensure adequate oil supply
	O-ring (3) Seal(16) (27) (29) (35) damage	Change O-ring (3) Seal (16) (27) (29) (35)
	Tube (38) (39) damage	Change tube (38) (39)
The pump can work, but the output flow is low	Piston (7) wear	Change piston (7)
	O-ring (3) Seal (16) (27) (29) (35) damage	Change O-ring (3) Seal(16) (27) (29) (35)damage
	A blockage in a hose, valve	Pressure release, cleaning element
Oil leaks through the air exhaust	Slincer dirty or damage	Substitute damaged elements

If the pump has anything wrong, please contact dealer or their technical supporter. We don't recommend customer repair the pump themselves.

STORAGE AND MAINTENANCE

Pumps are delivered in appropriate carton boxes. Packaging material should be properly disposed.
Handling and storage of the new pump do not require any special procedures.
However after the pump has been used, empty the used oil in the suction tube into an appropriate container. This is done by overturning the pump.
The dust in compressed air can slow down and even block the motor cylinder. The following steps may prevent this from happening:

1. Let in 50 gram of Vaseline oil or other lubricator from the air inlet hole weekly, operate the pump for several minutes after having lubricator.
2. Turn on the pump for several minutes until moving parts is fully lubricated.
3. You may repeat the above operation if necessary.
4. The above steps should be carried out on a weekly base.

For the pumps that are attached with compressed air treatment equipment, please empty the water retained in the reservoir of the filter-purger frequently.
For the pumps that are attached with a lubricator, please pay close attention to the lubricator's oil level and refill with SAE 20, SAE 30 or antifreeze oil for extreme conditions when necessary.

NOTE: The user should perform only routine maintenance operations (such as filters, silencers, cleaning…) with the pump in order not to damage it or compromise its safety.
Contact our sales or service center when the pump needs further maintenance.

HOW TO USE

Directly Fitted Pump into the Drum

1. Insert the suction tube of pump into the drum and secure with ring nut, suitable for commercial drums with 57mm diameter hole and threading 2” BSP
2. Fit a oil delivery tube for oil outlet of the air operated pump using only high quality tubes (normally 1/2”, according to DIN-SAE norms(), by means of 1/2” BSP threading fitting.
3. Oil delivery pistol: Connect delivery tube with delivery pistol using suitable pipe fittings, and point the pistol at right place.
4. Air inlet connection is 1/4” quick plug (or 1/4” NPT female) in all versions. Compressed air connection (to be supplied by the customer) should be done using suitable tube.
5. A pressure regulator to keep the pump’s working pressure at the best possible level (max 5-10 bar) between the pump and the compressed air line
6. A cut-off switch can enable the operator to stop the pump at any given moment by cutting the air supply off between the pump and the compressed air line
7. Switch on all switch.

WALL INSTALLED

Part List

Part No.	Description	QTY
1	Oil pump	1
2	Wall bracket	1
3	Pump adapter	1
4	Flexible suction hose	1
5	Suction hose adapter	1
6	Bung adapter	1
7	Rigid suction tube	1
8	Spring circlip	1
9	Ball	1
10	Valve seat	1
11	Filter	1

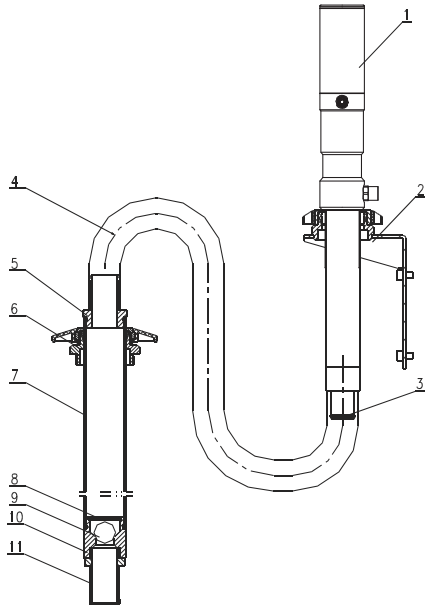

Proceed As Follows

1. Secure the bracket to the wall using the dowels at about 1200mm height appropriate for the tank’s dimensions. Make sure that the wall is solid and thick enough for the dowels. Do not interfere with hydraulic tubes or electric lines.
2. Secure the pump to the bracket 2
3. Connect the flexible suction tube 4 to the pump using the clamp provided.
4. Connect the rigid suction 7 to the end of the flexible suction tube 4 using the elastic clamp provided
5. Put the bung adapter 6 into the drum hole.
6. Put the rigid suction tube 7 into the pump and secure it in place

Extension Transfer
Part List

Part No.	Description	QTY
1	Oil pump	1
2	Bung adapter	1
3-1	Top connection	1
3-2	Extension 500mm tube	1
3-3	Extension sleeve	1
3-4	Extension 200mm tube	1
3-5	Foot connection	1
4	Foot valve	1
5	Filter	1

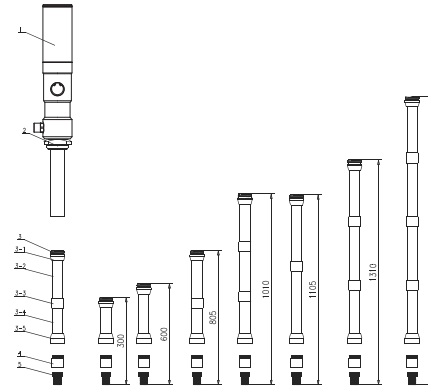

Proceed as follows

1. Depending on the length of the suction tube the desired extension length. Can be realized by using the modular extension elements (See the examples given above)
2. Example of possible application to pump with drum or rigid suction tube for obtaining personalized lengths according to needs.
3. Remove filter and foot valve from the stub pump, screw the extension tube on (W/top connection), then screw filter and foot valve on the extension tube (foot connection end!)

Connect the Pump with Other Accessories:
Part List

Part No.	Description
1	Oil pump
2	Bung adapter
3	Oil pistol
4	Hose with fitting
5	Air hose with quick coupling
6	Drum
7(7-1, 7-2, 7-3)	Filter, pressure regulator and lubricator

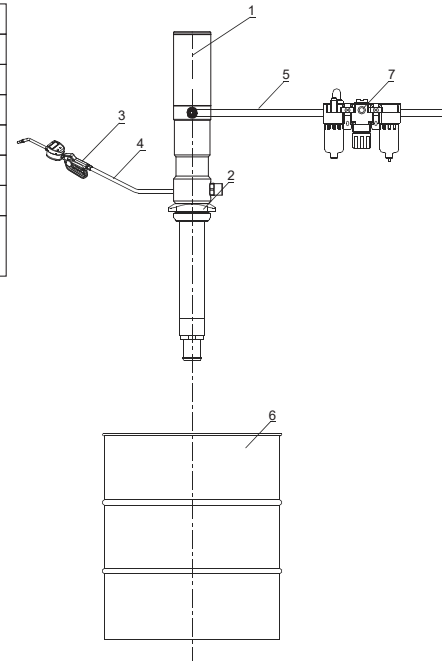

EXPLODED AND PARTS LIST

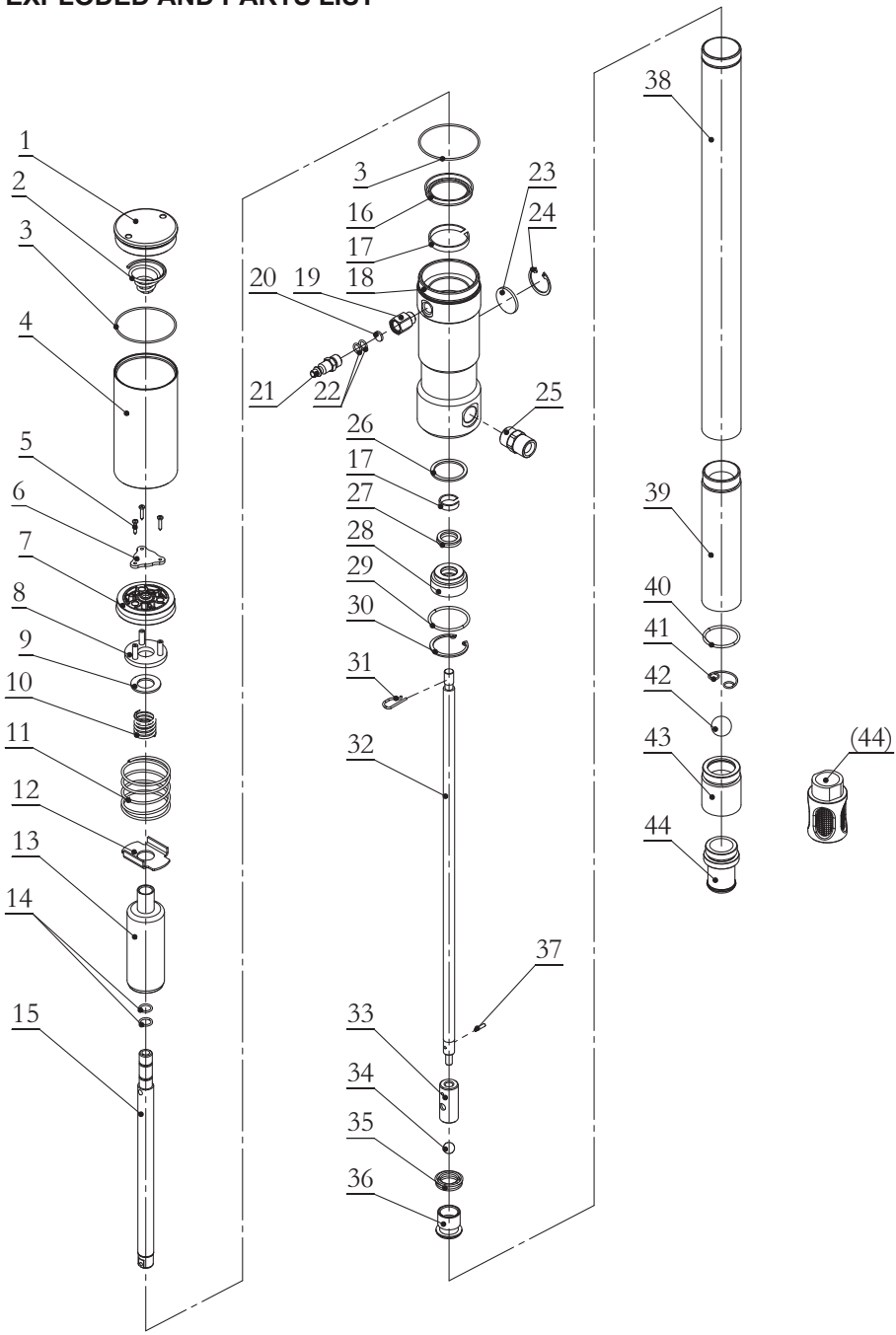

Part No.	Description	QTY	Part No.	Description	QTY
1	Air motor cover	1	23	Silencer	1
2	Spring	1	24	Spring circlip	1
*3	O-ring	2	25	Joint	1
4	Air motor shell	1	26	Washer	1
5	Screw	3	*27	Seal	1
6	Plate	1	28	Joint	1
*7	Piston	1	*29	O-ring	1
8	Plate	1	30	Spring circlip	1
9	Gasket	1	31	Screw	1
10	Spring	1	32	Connect shaft	1
11	Spring	1	33	Connect tube	1
12	Back plate	1	34	Ball	1
13	Barrel	1	*35	Seal	1
*14	O-ring	2	36	Piston	1
15	Pole	1	37	Pin	1
*16	Seal	1	38	Extension tube	1
17	Guiding	1	39	Suction tube	1
18	Air control center	1	*40	O-ring	1
19	Joint	1	41	Spring circlip	1
20	Silencer	1	42	Ball	1
21	Quick plug (option, only for 1/4" BSP)	1	43	Ball seat	1
*22	O-ring	2	44	Filter or connector	1

Note: The Part No. with "*" are the wearing parts.

Solution for Lubricating Equipment
LubeWORKS®

Intradin (Shanghai) Machinery Co., Ltd.
iti-fluid@intradinchina.com
www.intradin.com

Size: 145x210mm 157克双铜 REV 02/01/23 2.09.05.30.725